Item number: **FSC.28.023.10000**	Revision: **00** · Date: **05 - 2026**

Gear lever

~ 0.75 h.	EASY DIFFICULT

ENGLISH ·Thank you for choosing this premium product from SW-MOTECH. Visit our online shop for more information (e.g. model assignments). Required documents (e.g. national type approval) are available there for you to download.

Please read and understand all the instructions, safety information and warnings in these mounting instructions before mounting and using the product in order to avoid injury and damage. Keep these mounting instructions for reference.

This product was developed for vehicles in factory condition. Compatibility with original accessories or accessories from other manufacturers cannot be guaranteed.

These mounting instructions have been prepared to the best of our current knowledge. No legal claims relating to accuracy can be made. Errors and omissions excepted. We reserve the right to make technical and design changes. The copyright is held by SW-MOTECH.

SAFETY WARNING SYMBOL

⚠ **This warning symbol is used in these mounting instructions to warn of deadly dangers, injuries or other hazards. The words DANGER, WARNING or CAUTION are used as part of this warning symbol to convey important safety messages and information relating to the installation and use of this product. These words, together with the safety warning symbol, mean:**

⚠ **DANGER:** Indicates a hazardous situation which, if not avoided, will result in death or serious injury!

⚠ **WARNING:** Indicates a hazardous situation which, if not avoided, may result in death or serious injury!

⚠ **CAUTION:** Indicates a hazardous situation which, if not avoided, may result in minor or moderate injury!

⚠ ***NOTE:*** Important information, but not relating to a risk of death or injury (property damage only)!

GENERAL INFORMATION

⚠ **WARNING: Assembly and/or maintenance of this product requires advanced technical skill, appropriate tools, and a good understanding of tool usage and torque specifications. For your own safety, SW-MOTECH recommends having the assembly and/or maintenance carried out by a qualified and certified motorcycle workshop.**

⚠ **WARNING: If you do choose to assemble this product yourself, carefully and fully read the mounting instructions before assembly and use, and follow all instructions to avoid serious injury or death. Also observe all relevant information in the vehicle manual when mounting or using the product. IF YOU DO NOT UNDERSTAND ANY PART OF THESE MOUNTING INSTRUCTIONS OR NEED AN EXPLANATION AS TO A SPECIFIC INSTRUCTION, DO NOT ATTEMPT TO INSTALL THIS PRODUCT WITHOUT CONSULTING SW-MOTECH FOR ASSISTANCE!**

PREPARATION: Read the mounting instructions carefully and make sure that all parts on the parts list are available.

⚠ **CAUTION: Ensure that your vehicle is standing securely. Switch off the engine and remove the ignition key. Allow the engine/exhaust to cool down if necessary. Disconnect the battery when working on the electrical system. Only use proper tools and always wear safety goggles and gloves during assembly and maintenance. Have a second person help you with assembly and maintenance.**

ASSEMBLY: All parts and connections removed from the vehicle must be reinstalled according to the vehicle manufacturer's specifications or replaced with parts and hardware supplied by SW-MOTECH.

⚠ **WARNING: Secure all threads with a medium-strength liquid threadlocker, unless otherwise specified.**

⚠ **DANGER: Tightening torques not defined by SW-MOTECH must be obtained from the vehicle manufacturer or a certified motorbike workshop.**

FUNCTIONAL CHECK: After mounting the product, ensure that no moving parts are obstructed and that the function of the vehicle is not impeded. Cables and hoses must not rub against each other and/or be hindered in any way.

⚠ **WARNING: Carry out a comprehensive functionality check before you start to drive. Check the tightening torque of all connections and the tight fit of the product after the first 50 km and then at regular intervals. Mounted accessories can change the handling and stability of the vehicle.**

SW-MOTECH GmbH & Co. KG
Ernteweg 7-10
35282 Rauschenberg
Germany

info@sw-motech.com
www.sw-motech.com

The content translation is automated.
© SW-MOTECH GmbH & Co. KG

Errors and omissions excepted
Subject to technical and design changes.

Take note of the symbols and what they mean in the ASSEMBLY section. If the term OEM appears in the ASSEMBLY section, the vehicle manufacturer's specifications must be observed and applied.

If you have any questions, please don't hesitate to contact our Customer Service team or our distributors. You can find our telephone number and a list of our distributors in our online shop:
www.sw-motech.com

Do not use thread lock: Indicates that no liquid thread lock should be used at this point.

Tighten/note the tightening torque information: Indicates the tightening torque of a part specified by SW-MOTECH or the vehicle manufacturer (OEM).

Use thread locker: Indicates that a thread must be coated with liquid thread locker. H (HIGH): high strength; M (MEDIUM): medium strength; L (LOW): low strength.

The content translation is automated.
© SW-MOTECH GmbH & Co. KG

Errors and omissions excepted
Subject to technical and design changes.

1

1	2	3	4
FSC.28.023.900.01.02	FSC.00.127.500	M6 x 16; DIN 7991 SC.ST.06.016.01.7991.088	M6; DIN 985 MU.ST.06.01.985.08
1/1	1/1	1/1	1/1

4

5	6	7
KTM.54603069000	M6 x 25; ISO 7380 SC.ST.06.025.02.7380O.109	Ø 10 / ø 6,4 / h 6 DB.ST.0100.0064.0060.48
1/1	1/1	1/1

5

8	9	10
FSC.00.127.011.35	M6 x 25; DIN 912 SC.ST.06.025.01.912.088	FSC.00.127.022.02
1/1	1/1	1/1

The content translation is automated.
© SW-MOTECH GmbH & Co. KG

Errors and omissions excepted
Subject to technical and design changes.

1

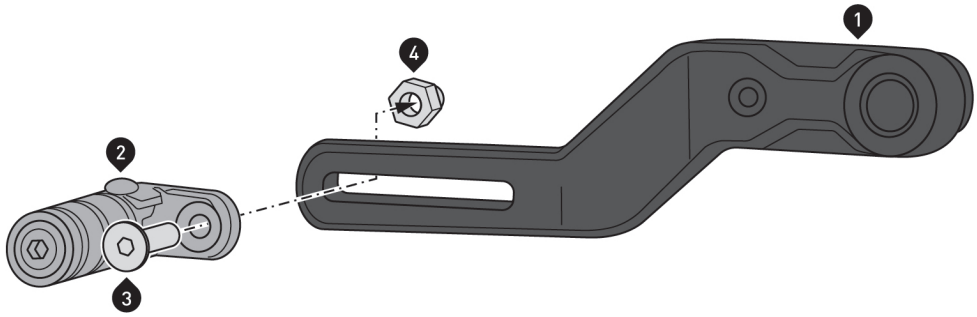

⚠ WARNING: Always wear eye and hand protection!
⚠ WARNING: Always use suitable tools!

⚠ ***NOTE:*** *How to mount optional attachments (8) – (10) is described in step [5].*

Screw the indicated parts to the gear lever (1).
Do not tighten the screw (3) yet.

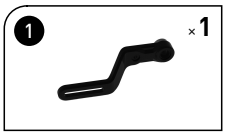

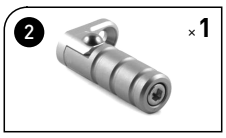

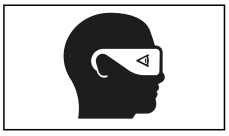

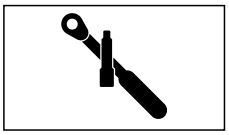

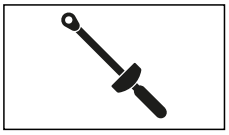

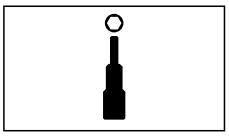

The content translation is automated.
© SW-MOTECH GmbH & Co. KG

Errors and omissions excepted
Subject to technical and design changes.

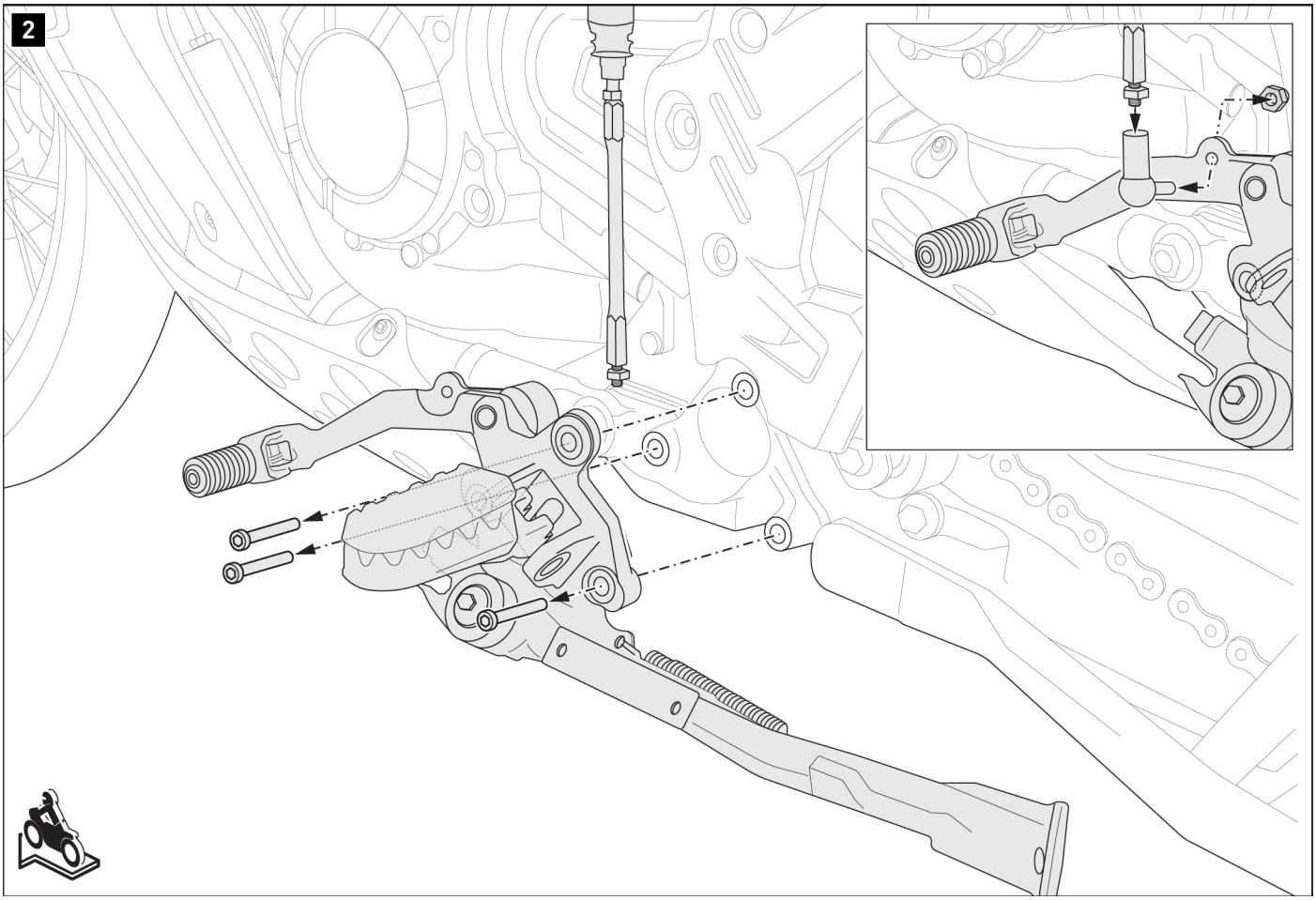

Remove the indicated parts from the original gear lever as shown in the detailed drawing.

Loosen the original screws and remove the original side stand mount together with the original gear lever from the vehicle.

The content translation is automated.
© SW-MOTECH GmbH & Co. KG

Errors and omissions excepted
Subject to technical and design changes.

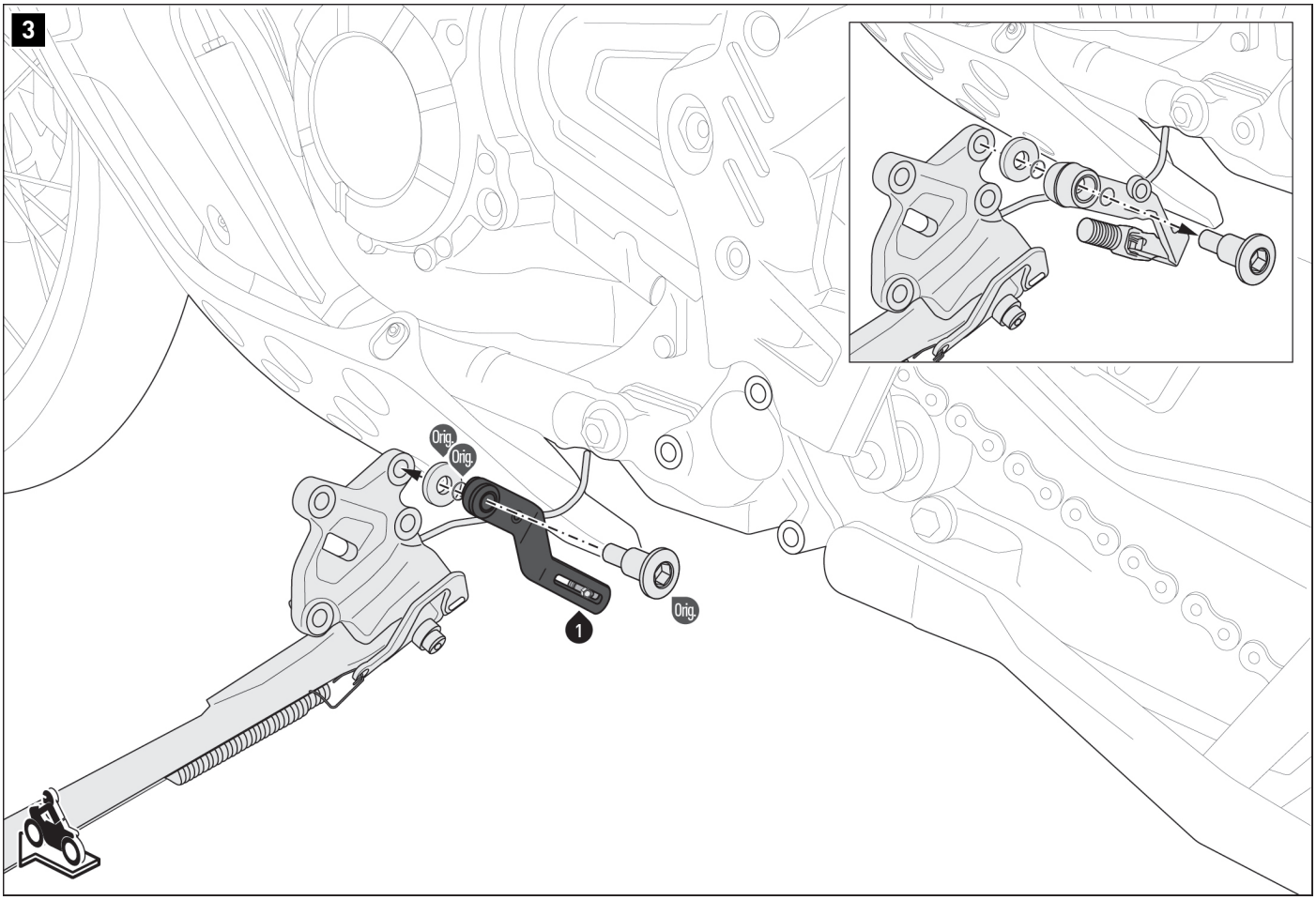

Rotate the original side stand mount and remove the original parts (Orig.) as shown in the detailed drawing.
Using the original parts (Orig.), mount the gear lever (1) onto the original side stand mount.

The content translation is automated.
© SW-MOTECH GmbH & Co. KG

Errors and omissions excepted
Subject to technical and design changes.

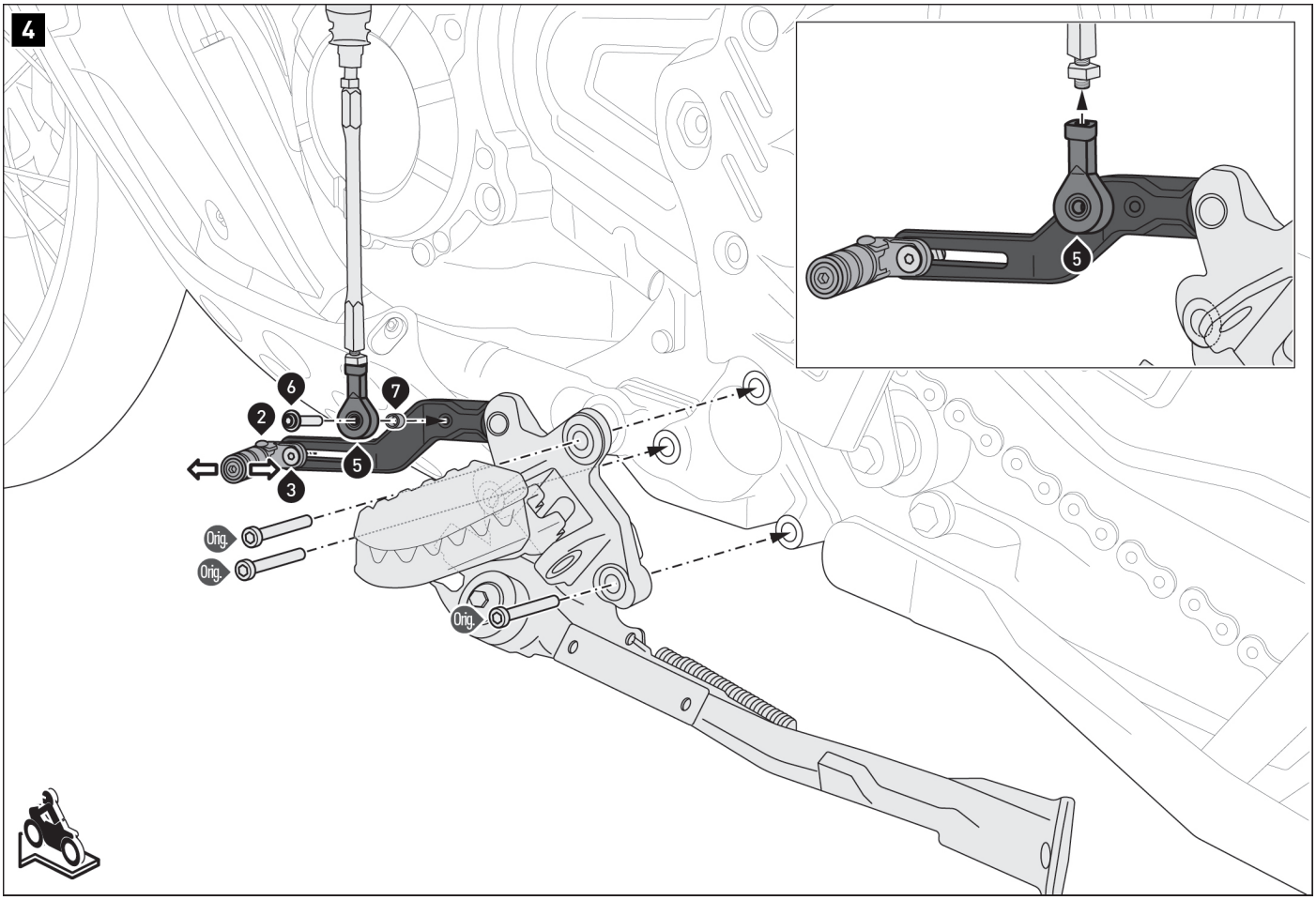

Screw the original side stand mount (Orig.) onto the vehicle.
⚠ WARNING: Use liquid threadlocker!
Tighten the original screw (Orig.) according to the vehicle manufacturer's specifications.

Screw the original gear shift linkage (Orig.) to the ball joint (5) (min. six threads); lock the thread using the original nut (Orig.) as shown in the detailed drawing.

Adjust the tread (2) according to your personal riding preferences.
Then tighten screws (3) and (5) as specified in the mounting instructions.

M	9 Nm

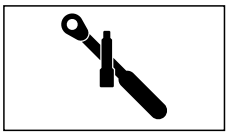

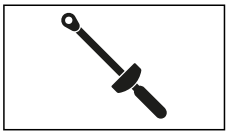

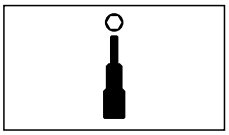

The content translation is automated.
© SW-MOTECH GmbH & Co. KG

Errors and omissions excepted
Subject to technical and design changes.

5

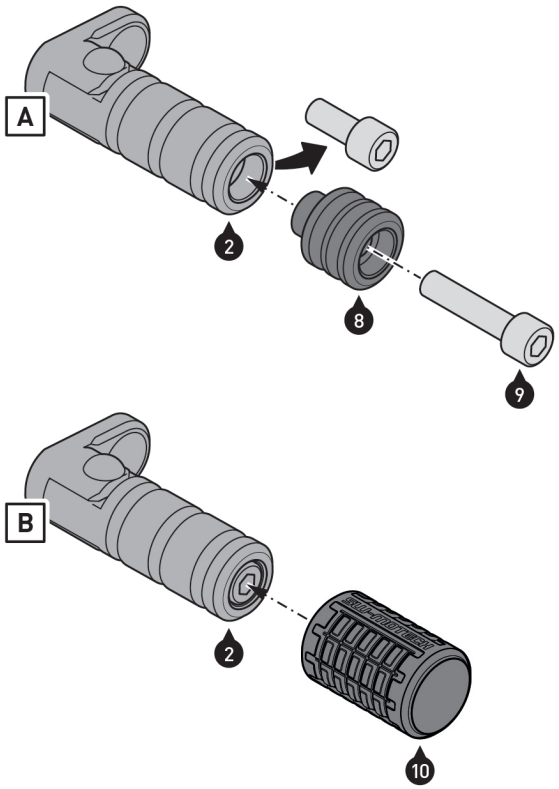

⚠ ***NOTE:*** *This step is optional.*

Option [A]: Remove the factory-installed screw from the (5) pedal.
Screw the pedal extension (8) to the pedal (5).
⚠ WARNING: Use liquid threadlocker!
Tighten the screw (9) as specified in the mounting instructions.

Option [B]: Place the rubber sleeve (10) over the pedal (5).
Ensure that the inner rings of the rubber sleeve (10) are positioned in the recesses of the pedal (5).

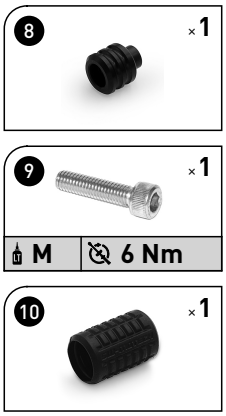

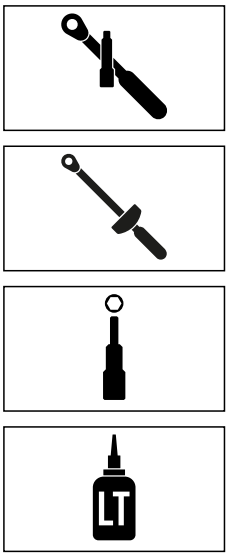

© SW-MOTECH GmbH & Co. KG

Errors and omissions excepted
Subject to technical and design changes.

PRODUCT-SPECIFIC NOTES

⚠ WARNING: This product may limit cornering and ground clearance when riding at extreme lean angles!

⚠ WARNING: After installing the gear lever, ensure that all components in the surrounding area are uninhibited! Shift through all gears and make sure that the gear lever is properly adjusted for you as a driver!

⚠ ***NOTE***: *Please observe the country-specific regulations for the registration/operation of your vehicle or any applicable TÜV regulations. Have parts subject to registration entered in the vehicle documents by your inspection authority after installation.*

The content translation is automated.
© SW-MOTECH GmbH & Co. KG

Errors and omissions excepted
Subject to technical and design changes.